GREASBY

item number : 47502/81/36
47502/81/38

EAN code : 5411212470102
5411212470119

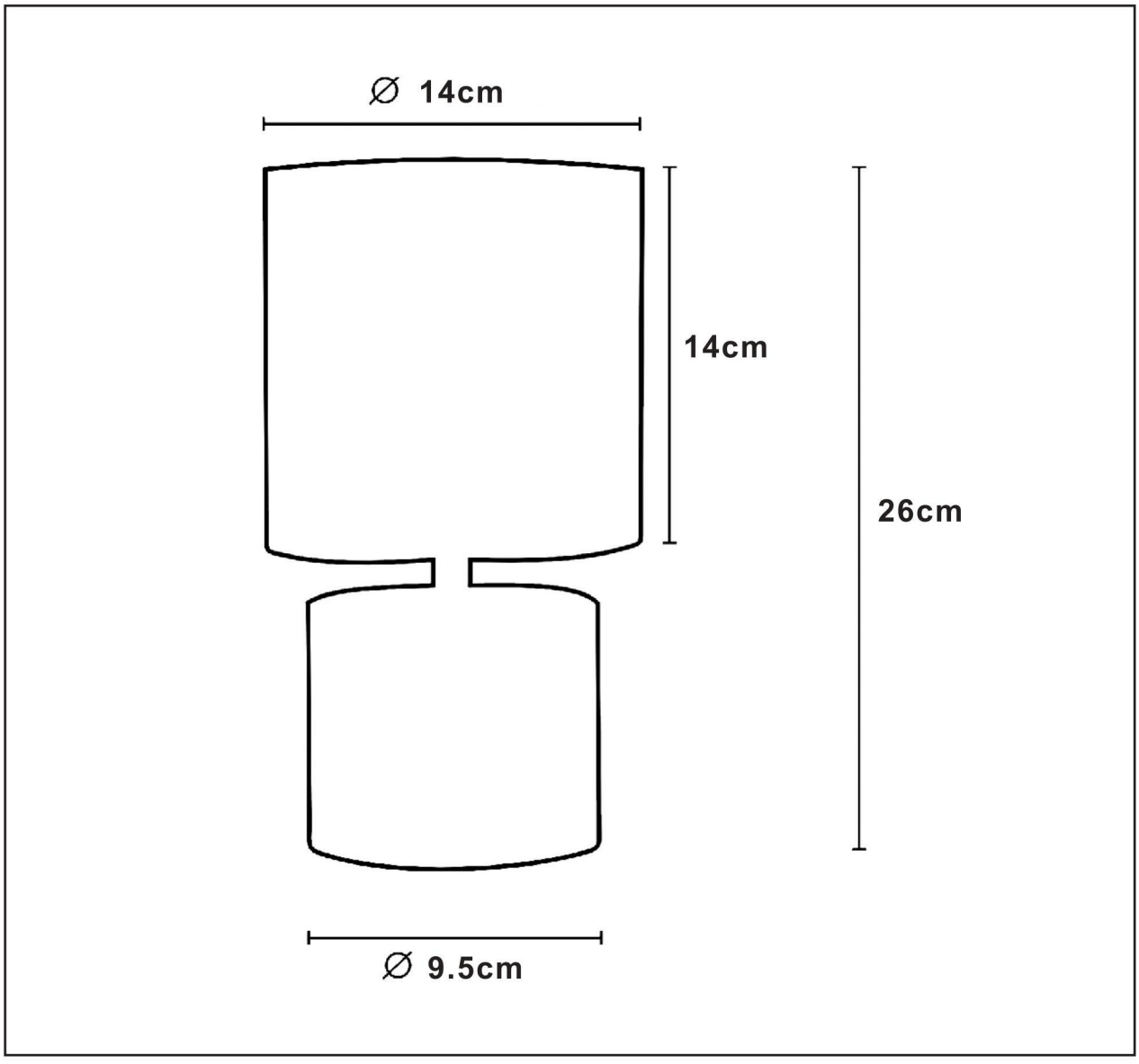

For more specifications, dimensions please visit

www.lucide.com