FDV – DOKUMENTASJON	Nr.: 065
	Rev.:
	Dato: 5.1.2016

Produktspesifikasjon	Tilkoblingsklemmer
Produktnavn	Serie OTL, 1 polt, 4 tilkoblinger 1,5 – 50mm^2
Anvisning for drift	Ingen
Vedlikehold	Produktet er vedlikeholdsfritt
Henvisninger Vedlegg	Produktkatalog, dokumentasjon, brukerveiledning og tekniske data
Produsent	Ouneva group www.ounevagroup.fi/en/ouneva-products/home/
Importør	**EFA Elektro AS,** Postboks 593, 1411 Kolbotn, Norway Tlf. 66812400 e-mail: post@efa.no - **www.efa.no**

EFA Elektro AS

Rune Hovland

Rune Hovland
Produktsjef

OUNEVA
OUNEVA GROUP

PRODUCT CARD

Product data

Product code	**VC05-0016**	STK-code	**1914106**	EAN-code	**6410019141061**
Product name	OTL-connector 2xAl/Cu 1,5-50mm² (Grey)				
Wires	2xAl/Cu 1,5-50mm²				

Technical data

Nominal current	Cu	**320**	A
	Al	**290**	A
Nominal voltage		**1000**	V
Max. Current (US)	Cu	**300**	A
	Al	**240**	A
Max. Voltage (US)		**600**	V
Number of pole		**1**	pcs
Max. Cross section		**50**	mm²
Tightening torque	1,5-2,5 mm²	**1,5**	Nm
	4-10 mm²	**5**	Nm
	16-50 mm²	**10**	Nm
	-	**-**	Nm
Max. Operating temperature		**80**	°C
Weight		**90**	g
IP-protection		**IP20**	
Standards		**EN 61238-1; EN60947-7-1; UL1059**	
Color/ Material-flame rating		**Grey RAL 7035/ PA66-V0**	
Mounting/ Connection		**DIN-rail mounting**	

Description

OTL-connectors are designed to be used connecting and branching aluminium and copper conductors. The body is made of tin plated aluminium.

Drawing

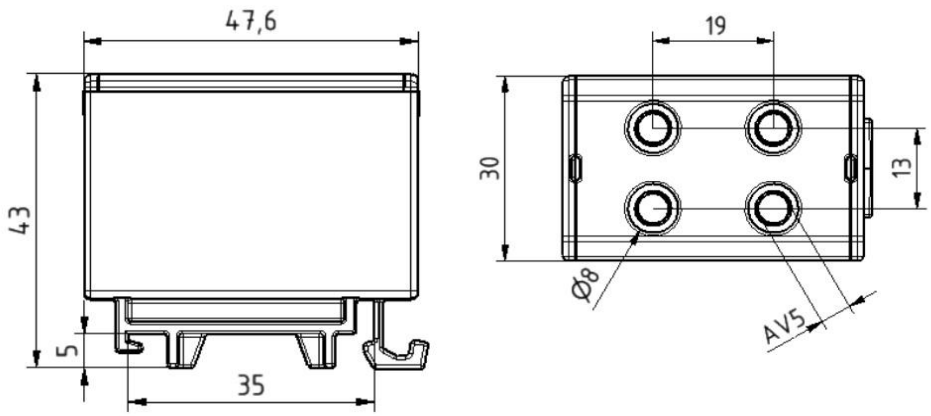

Package

Package	**Box**	Pcs / Package	**15**	Weight [kg]	**0,80**
Length [mm]	**120**	Width [mm]	**130**	Height [mm]	**100**

OUNEVA
OUNEVA GROUP

PRODUCT CARD

Product data

Product code	**VC05-0048**	STK-code	**1914107**	EAN-code	**6410019141078**
Product name	OTL-connector 2xAl/Cu 1,5-50mm² (Blue)				
Wires	2xAl/Cu 1,5-50mm²				

Technical data

Nominal current	Cu	**320**	A
	Al	**290**	A
Nominal voltage		**1000**	V
Max. Current (US)	Cu	**300**	A
	Al	**240**	A
Max. Voltage (US)		**600**	V
Number of pole		**1**	pcs
Max. Cross section		**50**	mm²
Tightening torque	1,5-2,5 mm²	**1,5**	Nm
	4-10 mm²	**5**	Nm
	16-50 mm²	**10**	Nm
	-	**-**	Nm
Max. Operating temperature		**80**	°C
Weight		**90**	g
IP-protection		**IP20**	
Standards		**EN 61238-1; EN60947-7-1; UL1059**	
Color/ Material-flame rating		**Blue RAL 5015/ PA66-V0**	
Mounting/ Connection		**DIN-rail mounting**	

Description

OTL-connectors are designed to be used connecting and branching aluminium and copper conductors. The body is made of tin plated aluminium.

Drawing

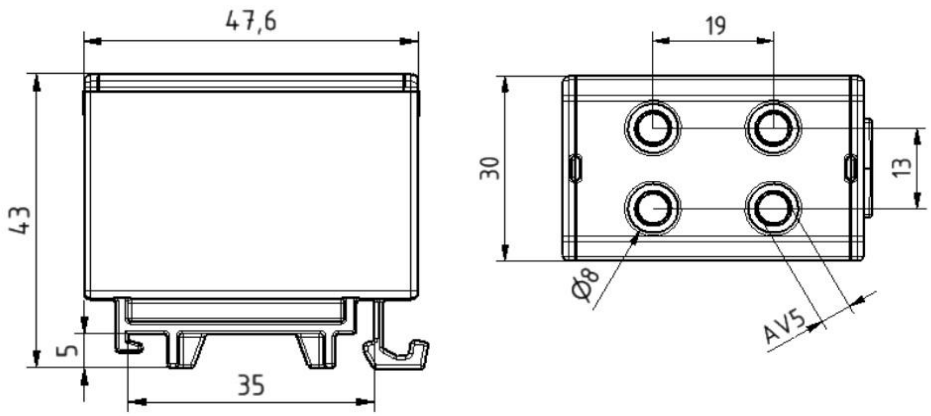

Package

Package	**Box**	Pcs / Package	**15**	Weight [kg]	**0,80**
Length [mm]	**120**	Width [mm]	**130**	Height [mm]	**100**

OUNEVA
OUNEVA GROUP

PRODUCT CARD

Product data

Product code	**VC05-0049**	STK-code	**1914108**	EAN-code	**6410019141085**
Product name	OTL-connector 2xAl/Cu 1,5-50mm² (Yellow/Green)				
Wires	2xAl/Cu 1,5-50mm²				

Technical data

Nominal current	Cu	**320**	A
	Al	**290**	A
Nominal voltage		**1000**	V
Max. Current (US)	Cu	**-**	A
	Al	**-**	A
Max. Voltage (US)		**-**	V
Number of pole		**1**	pcs
Max. Cross section		**50**	mm²
Tightening torque	1,5-2,5 mm²	**1,5**	Nm
	4-10 mm²	**5**	Nm
	16-50 mm²	**10**	Nm
	-	**-**	Nm
Max. Operating temperature		**80**	°C
Weight		**90**	g
IP-protection		**IP20**	
Standards		**EN 61238-1; EN60947-7-1**	
Color/ Material-flame rating		**Green RAL 6018, Yellow RAL 1016/ PA66-V0**	
Mounting/ Connection		**DIN-rail mounting**	

Description

OTL-connectors are designed to be used connecting and branching aluminium and copper conductors. The body is made of tin plated aluminium.

Drawing

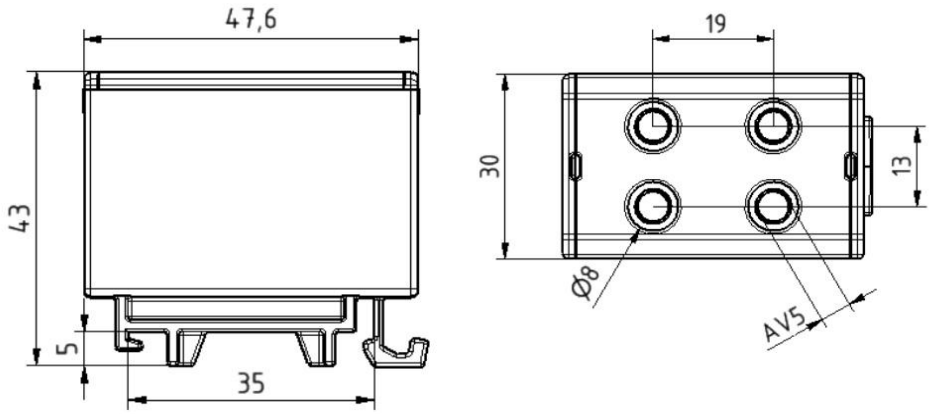

Package

Package	**Box**	Pcs / Package	**15**	Weight [kg]	**0,80**
Length [mm]	**120**	Width [mm]	**130**	Height [mm]	**100**

OUNEVA
OUNEVA GROUP

INSTALLATION GUIDE

Product data

Product code	Product name	$I_{n\ Al}$	$I_{n\ Cu}$	U_n	US specific		
					$I_{max\ Al}$	$I_{max\ Cu}$	U_{max}
VC05-0016	OTL-connector 2xAl/Cu 1,5-50mm² (Grey)	290 A	320 A	1000 V	240 A	300 A	600 V
VC05-0048	OTL-connector 2xAl/Cu 1,5-50mm² (Blue)	290 A	320 A	1000 V	240 A	300 A	600 V
VC05-0049	OTL-connector 2xAl/Cu 1,5-50mm² (Yellow/Green)	290 A	320 A	1000 V	-	-	-
VC05-0146	OTL-connector 2xAl/Cu 1,5-50mm² (Red)	290 A	320 A	1000 V	-	-	-
VC05-0147	OTL-connector 2xAl/Cu 1,5-50mm² (Black)	290 A	320 A	1000 V	-	-	-

Installation

Type **DIN-rail mounting**

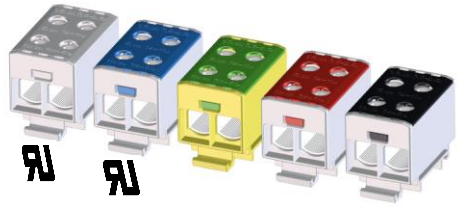

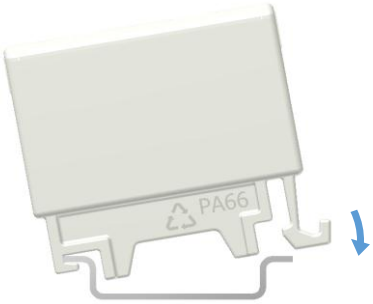

DIN-rail mounting
Set the connector to DIN-rail.
See picture. Push until "click"

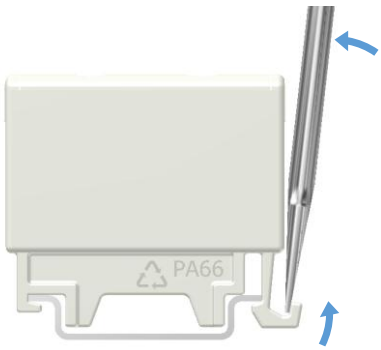

Removing from DIN-rail
Release the plastic snap with screwdriver. Lift the connector.

Connection

Screw			Tightening torque			Stripping length **L**	
	Thread	**M10**		1,5-2,5 mm²	**1,5 Nm**		**15 mm**
	SW	**5**		4-10 mm²	**5 Nm**		
				16-50 mm²	**10 Nm**		
				-	**-**		
			Max. Wire cross section		**50 mm²**		

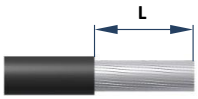

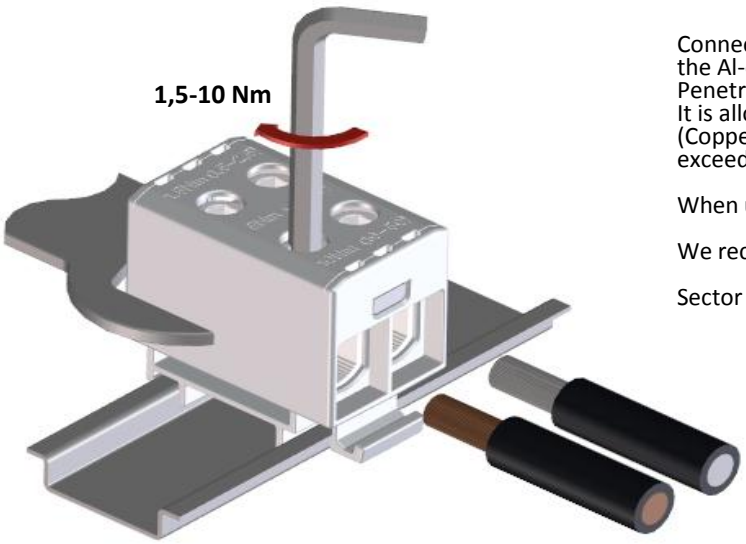

Installation

Connector can be used for both **copper- or aluminium conductors**. With the Al-conductors, It's recommended to use anti-corrosion paste. (e.g. Penetrox).
It is allowed to use max. of three adjacent cross sections in one space (Copper conductors). The nominal max. cross section value must not be exceeded.

When used Al-conductors, it is allowed to use only one conductor/space.

We recommend a ferrule when using a fine-stranded conductor.

Sector shaped conductors must be pre-rounded before installation.

Each protective or neutral conductor must have their own conductor space. SFS 6000:2007 clause 810.7

Cross section and max. number of Cu- conductors / space (Al- conductors in parenthesis)

1,5 mm2	2,5 mm2	6 mm2	10 mm2	16 mm2	25 mm2	35 mm2	50 mm2
3 (1)	**3 (1)**	**3 (1)**	**3 (1)**	**3 (1)**	**2 (1)**	**1 (1)**	**1 (1)**

The specified max. amount of conductors refers only to industrially installed terminals.

70 mm2	95 mm2	120 mm2	150 mm2	185 mm2	240 mm2	300 mm2	400 mm2
-	-	-	-	-	-	-	-